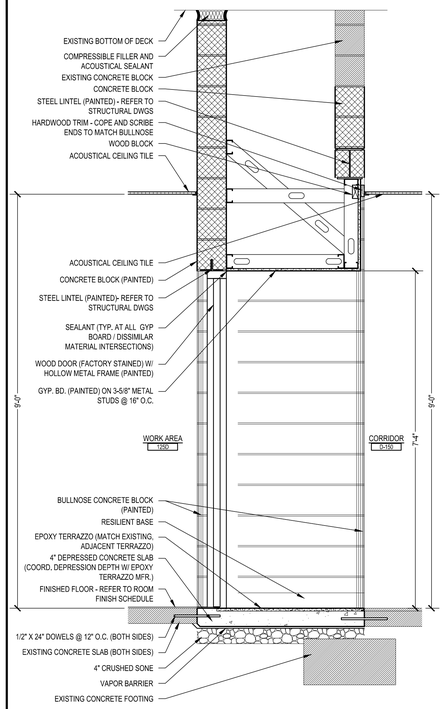

A A-C5 WALL SECTION
SCALE: 3/4" = 1'-0"

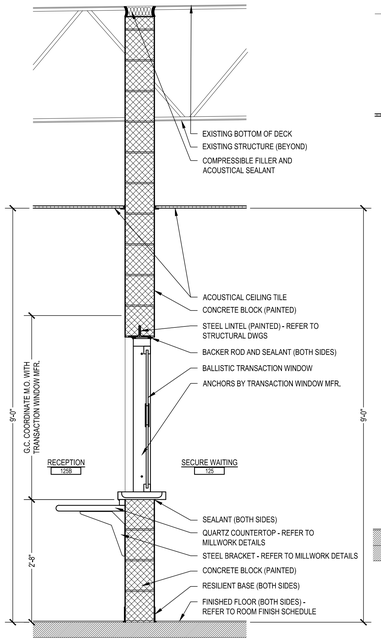

B A-C5 WALL SECTION
SCALE: 3/4" = 1'-0"

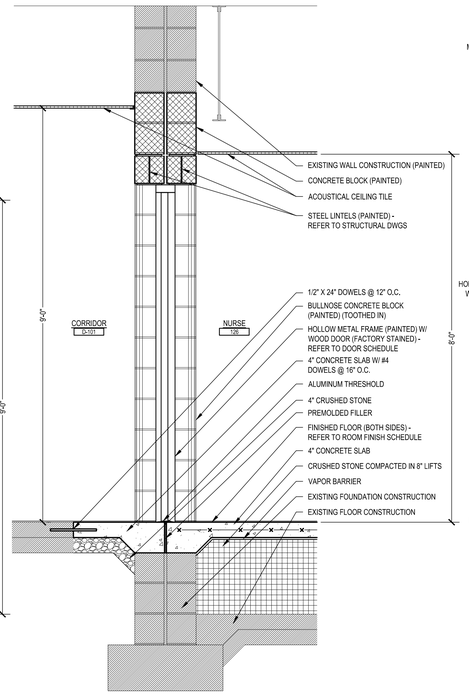

NOTE: REFER TO STRUCTURAL DRAWINGS FOR REINFORCEMENT NOTES

C A-C5 WALL SECTION
SCALE: 3/4" = 1'-0"

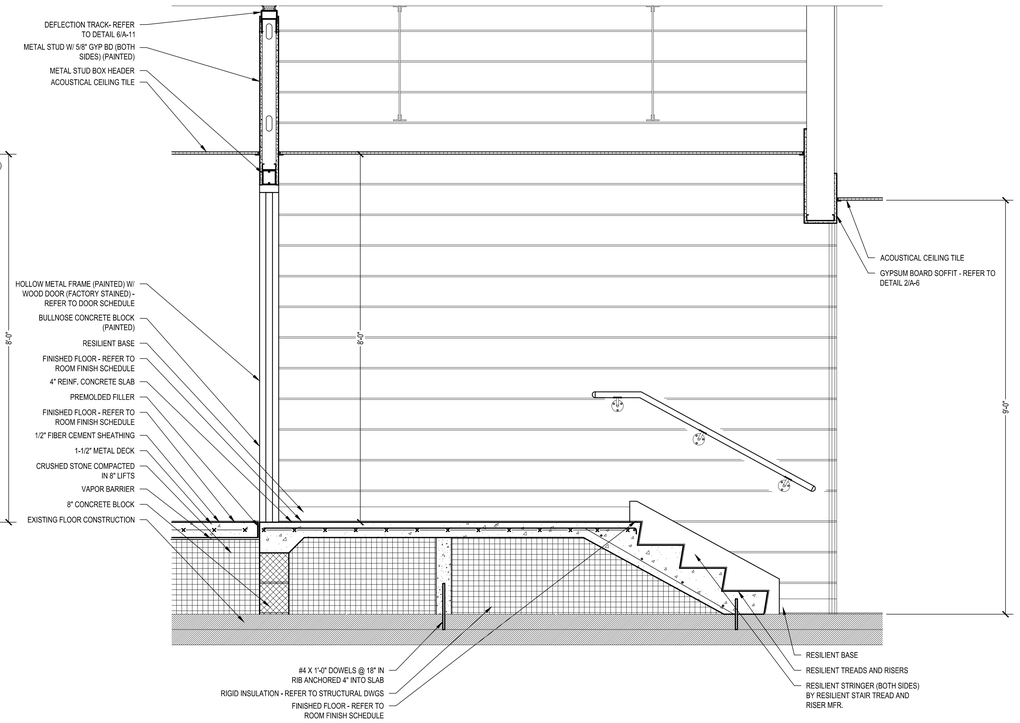

NOTE: REFER TO STRUCTURAL DRAWINGS FOR REINFORCEMENT NOTES

D A-C5 WALL SECTION
SCALE: 3/4" = 1'-0"

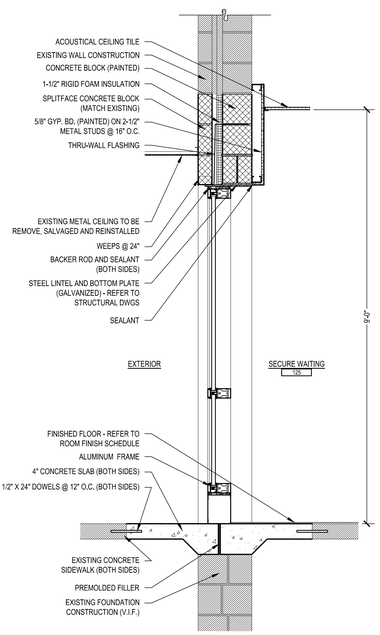

NOTE: REFER TO STRUCTURAL DRAWINGS FOR REINFORCEMENT NOTES

E A-C5 WALL SECTION
SCALE: 3/4" = 1'-0"

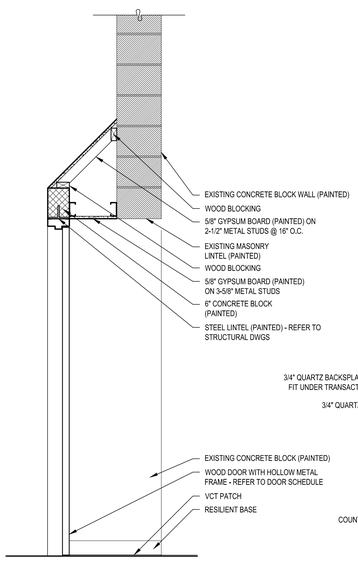

F A-C5 WALL SECTION
SCALE: 3/4" = 1'-0"

MILLWORK NOTES:
A) SHALL HAVE 2" RADIUSED OUTSIDE CORNERS TYPICAL
B) SHALL HAVE 3/4" PLYWOOD CABINET BODIES, DOORS, AND DRAWER FRONTS
C) SHALL HAVE TEMPERED HARDBOARD DUST PANELS INSTALLED BELOW ALL DRAWERS
D) SHALL BE SUPPLIED WITH LOCKS ON ALL DOORS AND DRAWERS. KEYING SHALL BE AS SPECIFIED.
E) GROMMETS SHALL ALSO BE PROVIDED AS INDICATED ON PLAN.

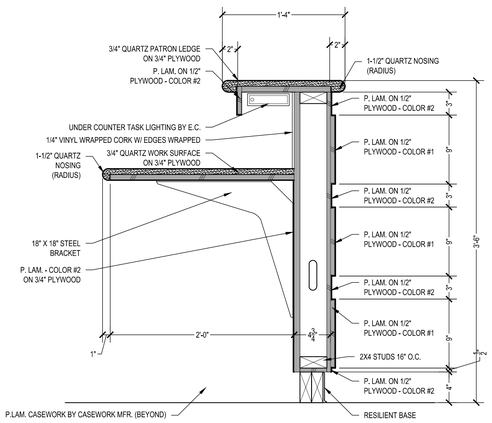

RECEPTION DESK DETAIL 1 A-C5
SCALE: 1-1/2" = 1'-0"

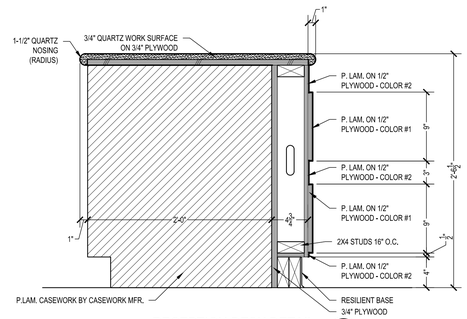

RECEPTION DESK DETAIL 2 A-C5
SCALE: 1-1/2" = 1'-0"

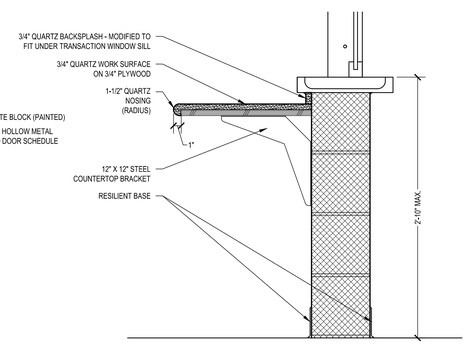

RECEPTION DESK DETAIL 3 A-C5
SCALE: 1-1/2" = 1'-0"

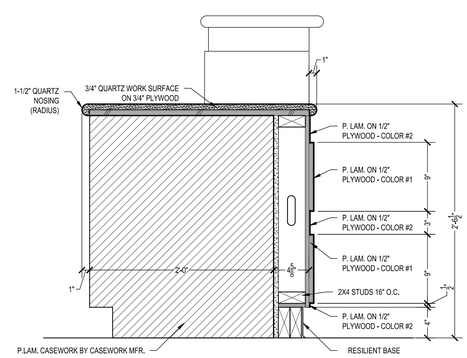

RECEPTION DESK DETAIL 4 A-C5
SCALE: 1-1/2" = 1'-0"

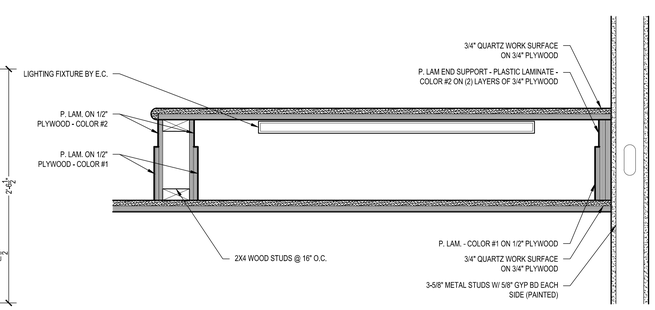

RECEPTION DESK DETAIL 5 A-C5
SCALE: 1-1/2" = 1'-0"

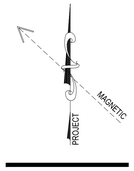

AEM ARCHITECTS INC.
3700 PERKIOMEN AVENUE, READING, PA 19606-2795
Phone: 610.779.3220 Fax: 610.779.9022
www.aem-arch.com

WALL SECTIONS AND MILLWORK DETAILS - UNIT C

RENOVATIONS TO THE
COCALICO SCHOOL DISTRICT
SOUTH REAMSTOWN ROAD, EAST COCALICO TOWNSHIP, LANCASTER COUNTY, PA

ALL DIMENSIONS and EXISTING CONDITIONS shall be CHECKED and VERIFIED by the CONTRACTOR at the SITE.

JOB NO.: 22011.00
DRAWN BY: SRH
DATE: 04.14.23

A-C5