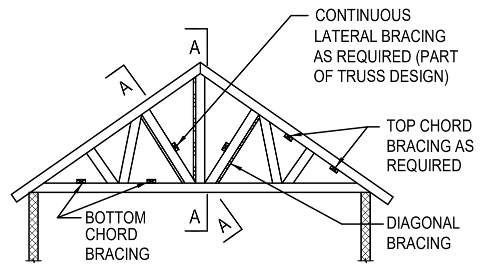

TYPICAL TRUSS ELEVATION

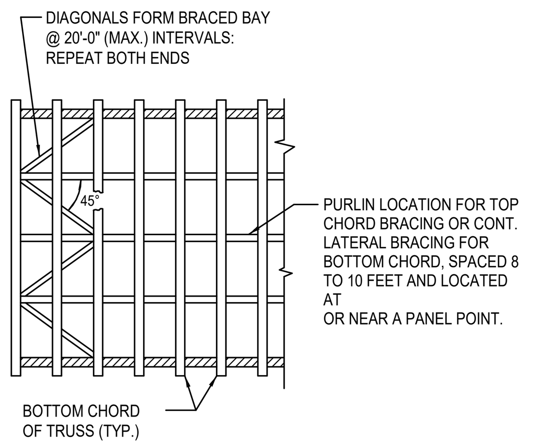

TOP/BOTTOM CHORD BRACING

GENERAL NOTES

1) WOOD TRUSSES SHALL BE BRACED AND ERECTED IN ACCORDANCE WITH THE "TRUSS PLATE INSTITUTE" STANDARDS. SEE GENERAL NOTE.
2) BRACING IN THE PLANE OF WEB MEMBERS;
   a. THE TRUSS FABRICATOR SHALL PROVIDE AND LOCATE CONTINUOUS LATERAL BRACING FOR EACH TRUSS WEB MEMBER AS REQUIRED.
   b. LATERAL BRACING SHALL BE RESTRAINED BY DIAGONAL BRACING (MIN. 2" THICK NOMINAL LUMBER). THIS BRACING IS TO BE CONTINUOUS.
   c. A MINIMUM OF TWO ROWS OF DIAGONAL BRACING IS REQUIRED. ONE AT EACH VERTICAL WEB MEMBER CLOSES TO BEARING LOCATIONS.
3) THE BOTTOM CHORDS SHALL BE BRACED BY CONTINUOUS LATERAL BRACING SPACED AT 8 TO 10 FEET NAILED TO TOP OF THE BOTTOM CHORD. DIAGONALS PLACED AT 45° TO THE LATERAL BRACES SHALL BE LOCATED AT EACH END, IF BUILDING EXCEEDS 60 FEET IN LENGTH, DIAGONAL BRACING SHOULD BE REPEATED AT 20 FOOT INTERVALS.
4) TOP CHORD BRACING
   a. IF PLYWOOD DECKING IS APPLIED DIRECTLY TO TOP CHORD, PROPERLY LAPPED AND NAILED TO DEVELOP DIAPHRAGM ACTION, BRACING IS NOT REQUIRED.
   b. IF PURLINS ARE USED, DIAGONAL TOP CHORD BRACING IS REQUIRED AT EACH END. IF BUILDING EXCEEDS 60 FEET IN LENGTH, DIAGONAL BRACING SHOULD BE REPEATED AT 20 FOOT INTERVALS.
5) WOOD ROOF TRUSSES ARE TO BE DESIGNED FOR THE WOOD FABRICATOR BY A PROFESSIONAL ENGINEER AND SEALED CALCULATIONS AND DRAWINGS ARE TO BE SUBMITTED FOR REVIEW.

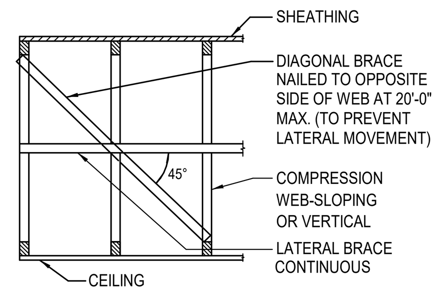

SECTION A-A

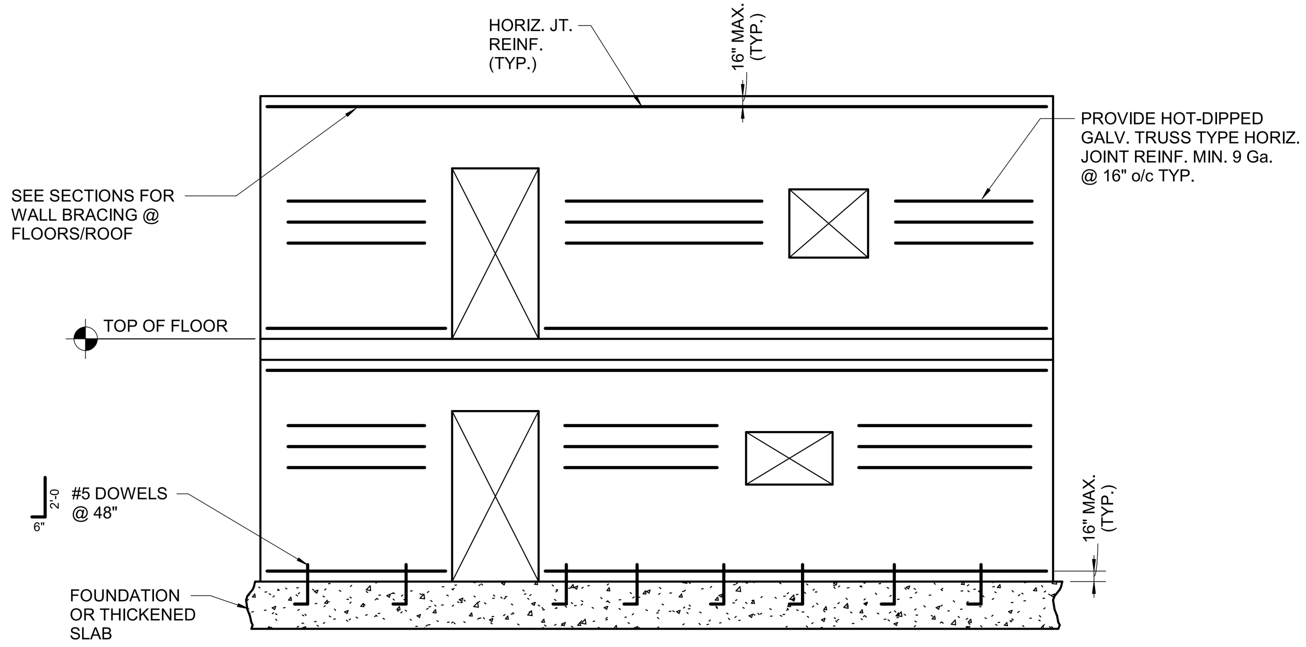

TYPICAL MINIMUM SEISMIC REINFORCEMENT FOR ALL UNREINFORCED CMU WALLS

NOTES:
1) FILL ALL CORES WITH REINFORCING BARS WITH 3000 PSI GROUT.
2) THIS IS MININIMUM REINFORCEMENT REQUIRED. SEE WALL SECTIONS AND SCHEDULES FOR ADDITIONAL REINFORCING.

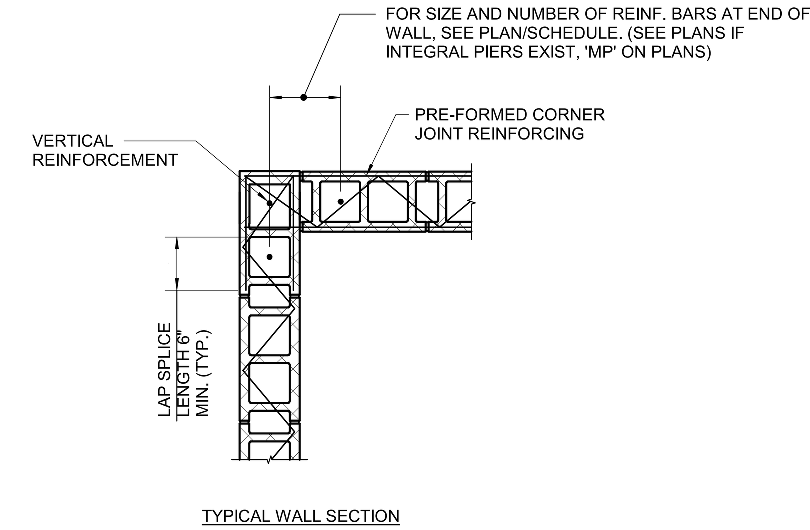

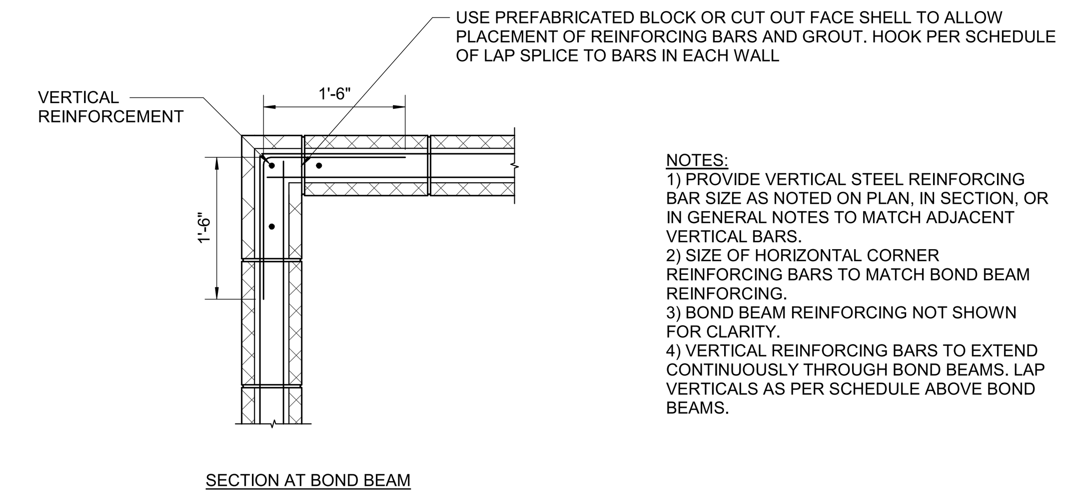

NOTES:
1) PROVIDE VERTICAL STEEL REINFORCING BAR SIZE AS NOTED ON PLAN, IN SECTION, OR IN GENERAL NOTES TO MATCH ADJACENT VERTICAL BARS.
2) SIZE OF HORIZONTAL CORNER REINFORCING BARS TO MATCH BOND BEAM REINFORCING.
3) BOND BEAM REINFORCING NOT SHOWN FOR CLARITY.
4) VERTICAL REINFORCING BARS TO EXTEND CONTINUOUSLY THROUGH BOND BEAMS. LAP VERTICALS AS PER SCHEDULE ABOVE BOND BEAMS.

TYPICAL HORIZONTAL CMU WALL CORNER REINFORCEMENT DETAIL (END OF WALL DETAIL SIMILAR)

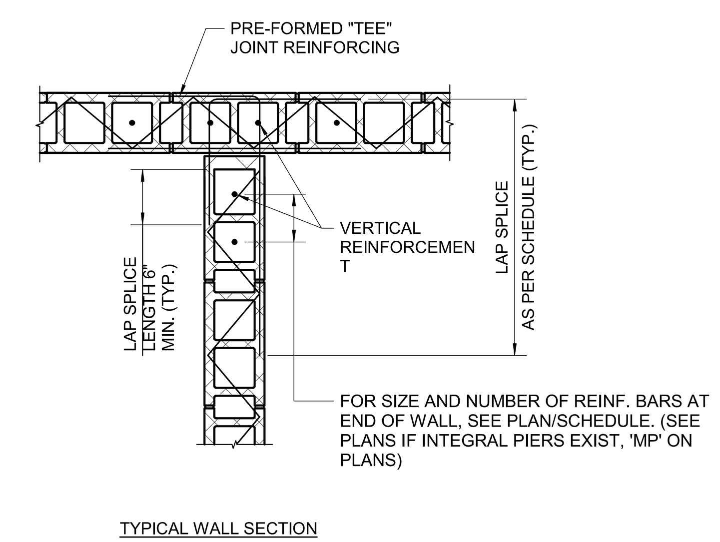

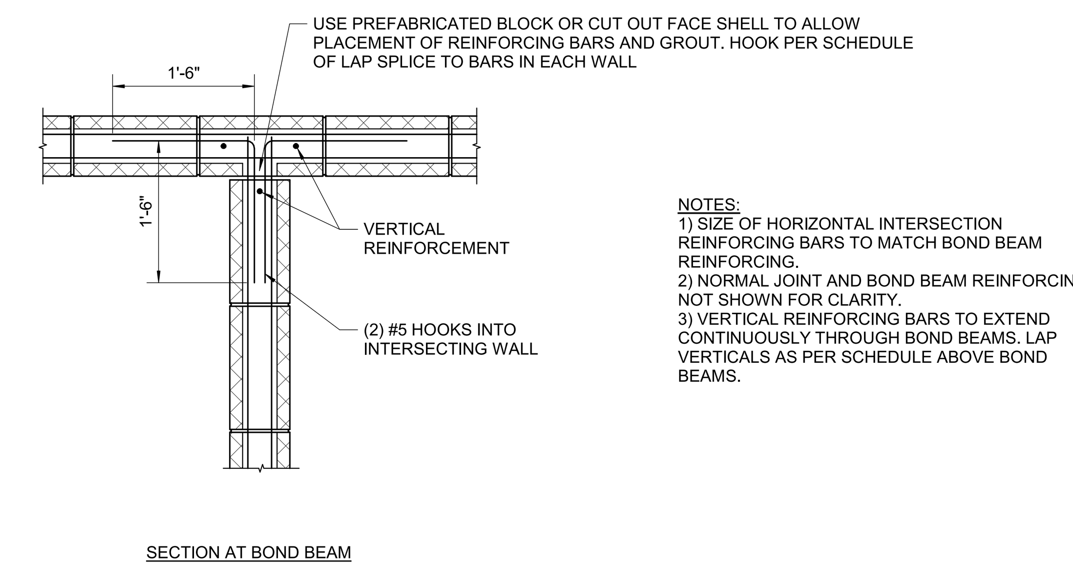

NOTES:
1) SIZE OF HORIZONTAL INTERSECTION REINFORCING BARS TO MATCH BOND BEAM REINFORCING.
2) NORMAL JOINT AND BOND BEAM REINFORCING NOT SHOWN FOR CLARITY.
3) VERTICAL REINFORCING BARS TO EXTEND CONTINUOUSLY THROUGH BOND BEAMS. LAP VERTICALS AS PER SCHEDULE ABOVE BOND BEAMS.

TYPICAL HORIZONTAL CMU WALL INTERSECTION REINFORCEMENT DETAIL

SIMPSON STRONG-TIE TIEDOWN CONNECTORS FOR ROOF TRUSSES						
NOTE: G.C. TO PROVIDE A MINIMUM OF (2) WALL STUDS FOR UPLIFT LOADS < 3000#, (3) WALL STUDS FOR UPLIFT LOADS BETWEEN 3000# & 7000# & (4) WALL STUDS FOR UPLIFT LOAD BETWEEN 7000# AND 11000# UNLESS GREATER/LARGER POST/STUDS ARE SHOWN ON DOCUMENTS.						
ALLOWABLE UPLIFT LOAD - LBS.	NO. OF PLIES	NON WRAP-OVER CONNECTOR	WRAP-OVER CONNECTOR	VERTICAL HEIGHT OF TRUSS REQ'D. BY CONNECTOR ABOVE PLATE	POST/WALL STUD(S) FOUNDATION TIE-DOWN	MULTI-STORY FLOOR-FLOOR TIES
150	ANY	(3) 10d NAILS	-	NONE	NONE	NONE
200	ANY	(4) 10d NAILS	-	NONE	NONE	NONE
535	1	H2.5A	-	3"	NONE	NONE
1,070	1	(2) H2.5A DIAGONALLY OPPOSITE	-	3"	(1) LTT20B, (1) 5/8"∅ BOLT, 12" EMBED.	CS16-R ABOVE & BELOW WITH 3/8"∅ ALL-THREAD
1,120	2	-	H16	3"	(1) LTT20B, (1) 5/8"∅ BOLT, 12" EMBED.	CS16-R ABOVE & BELOW WITH 3/8"∅ ALL-THREAD
1,120	ANY	-	H16-2	3"	(1) LTT20B, (1) 5/8"∅ BOLT, 12" EMBED.	CS16-R ABOVE & BELOW WITH 3/8"∅ ALL-THREAD
1,245	2	HTS30C	-	16"	(1) LTT20B, (1) 5/8"∅ BOLT, 12" EMBED.	CS16-R ABOVE & BELOW WITH 3/8"∅ ALL-THREAD
1,750	AT LEAST 2	LGT2	-	3"	(1) LTT20B, (1) 5/8"∅ BOLT, 12" EMBED.	CS14 OR HTT4 ABOVE & BELOW WITH 5/8"∅ ALL-THREAD
2,140	3	(4) H2.5A	-	3"	(1) HTT4, (1) 5/8"∅ BOLT, 12" EMBED.	CS14 OR HTT5 ABOVE & BELOW WITH 5/8"∅ ALL-THREAD
3,170	AT LEAST 2	LGT3-SDS2.5	-	3"	(1) HTT5, (1) 5/8"∅ BOLT, 12" EMBED.	CMSTC16 OR HTT5 ABOVE & BELOW WITH 5/8"∅ ALL-THREAD
3,330	ANY	-	MGT, (1) HTT16, (1) 5/8"∅ BOLT	3"	(1) HTT5, (1) 5/8"∅ BOLT, 12" EMBED.	CMSTC16 OR HTT5 ABOVE & BELOW WITH 5/8"∅ ALL-THREAD
5,250	ANY	(1) HTT22 ON TRUSS & (1) HTT22 ON POST WITH (1) 5/8"∅ BOLT	-	24"	(1) HDU8-SDS2.5 & (1) 7/8"∅ BOLT , 12" EMBED.	CMST14 OR HTT5 ABOVE & BELOW WITH 5/8"∅ ALL-THREAD
6,485	2	-	HGT-2, (2) HTT16, (2) 5/8"∅ BOLTS	3"	(1) HDU8-SDS2.5 & (1) 7/8"∅ BOLT , 12" EMBED.	CMST14 OR HTT5 EA. SIDE ABOVE & BELOW WITH 5/8"∅ ALL-THREAD
9,035	3	-	HGT-3, (2) HTT22, (2) 5/8"∅ BOLTS	3"	(1) HDU12-SDS2.5 & (1) 1"∅ BOLT , 12" EMBED.	CMST12 OR HTT5 EA. SIDE ABOVE & BELOW WITH 5/8"∅ ALL-THREAD
10,500	ANY	(1) HTT22 ON EA. SIDE OF TRUSS & (1) HTT22 ON EA. SIDE OF POST WITH (1) 5/8"∅ BOLT EA. SIDE	-	24"	(1) HDU14-SDS2.5 & (1) 1"∅ BOLT , 12" EMBED.	HTT5 EA. SIDE ABOVE & BELOW WITH 5/8"∅ ALL-THREAD

NOTE:
CONTRACTOR TO SELECT TIE-DOWN CONNECTOR FOR ALL ROOF TRUSSES WITH STATED UPLIFT CAPACITY THAT MEETS OR EXCEEDS ACTUAL NET UPLIFT VALUES STATED ON TRUSS PIECE DRAWINGS.

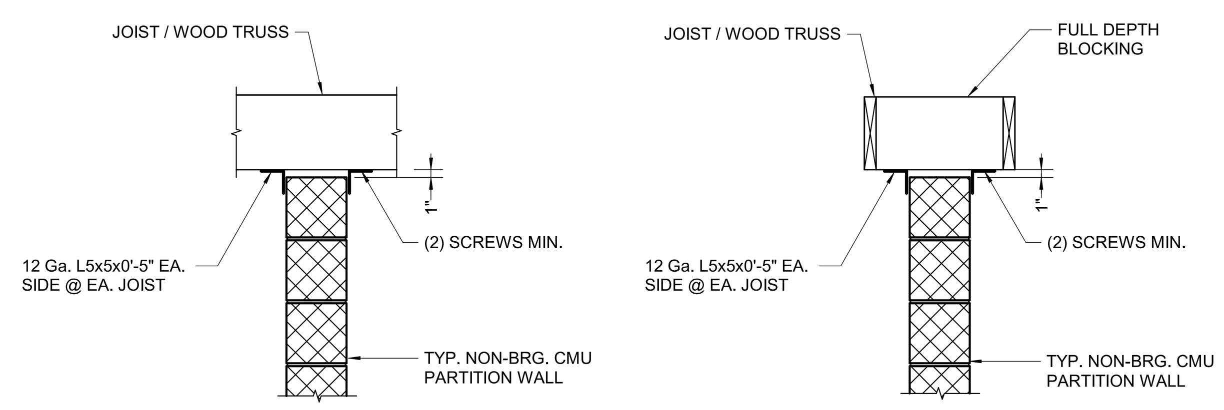

TYPICAL DETAILS @ TOP OF INTERIOR NON-LOADBEARING CMU PARTITION WALLS

NOTE:
1) COORDINATE w/ ARCH. DWGS. FOR ALL LOCATIONS, T.O. WALL HEIGHTS, ETC.
2) IF WALLS OCCUR WHERE COLUMNS, OR PERPENDICULAR WALLS OF AT LEAST "X"=3t IN LENGTH, ARE SPACED LESS THAN "Y"=36t APART, THEN DETAILS ABOVE ARE NOT REQUIRED.

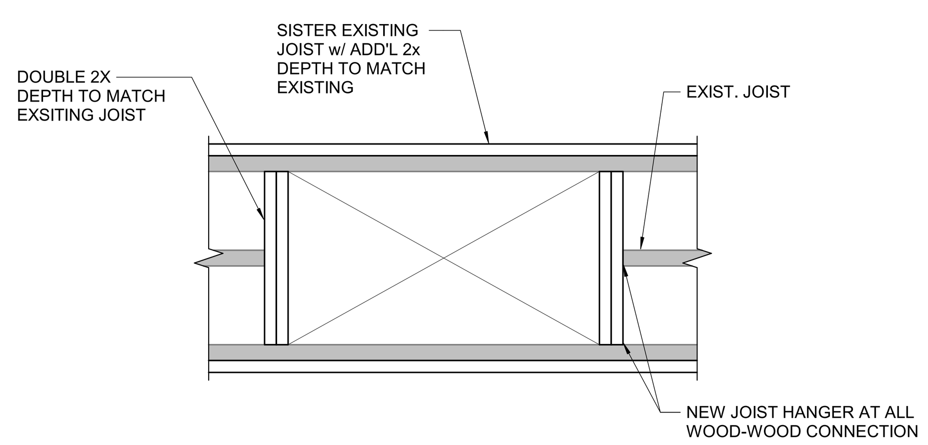

TYPICAL FRAMING MODIFICATION AT NEW OPENING

NOTES:
COORDINATE ALL OPENING SIZES AND LOCATIONS w/ MEP DWGS. AND EXISTING CONDITIONS

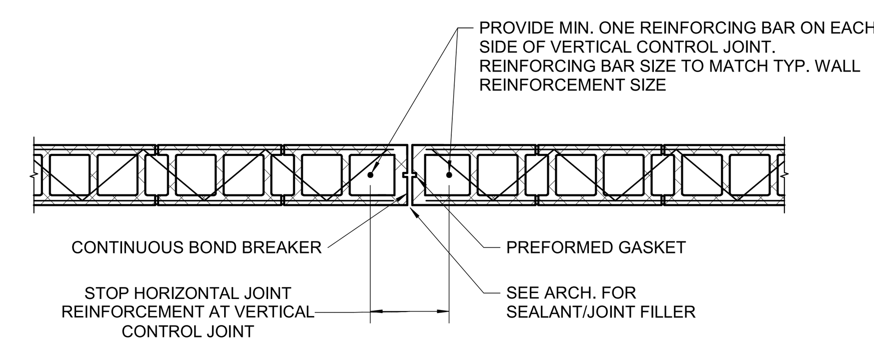

TYPICAL VERTICAL CONTROL JOINT IN CMU WALLS

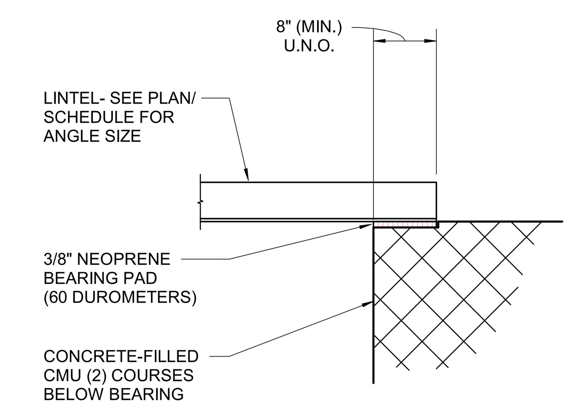

ANGLE LINTEL BEARING

TYPICAL LINTEL/BEAM BEARING DETAILS
(AT CMU BEARING WALLS)

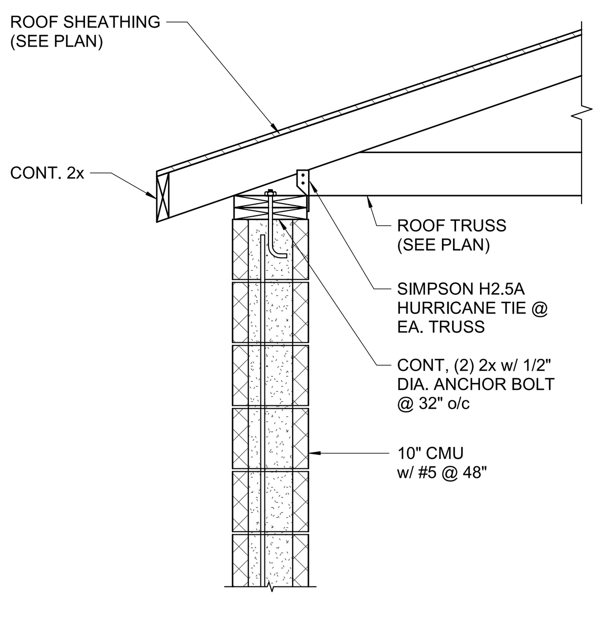

Section 1 / S400

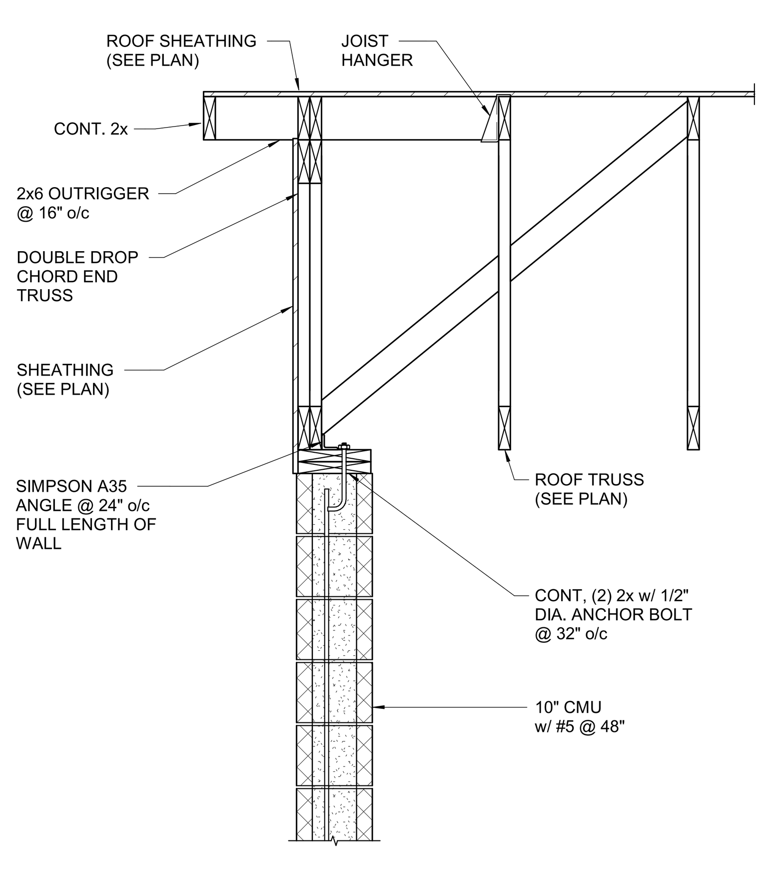

Section 2 / S400

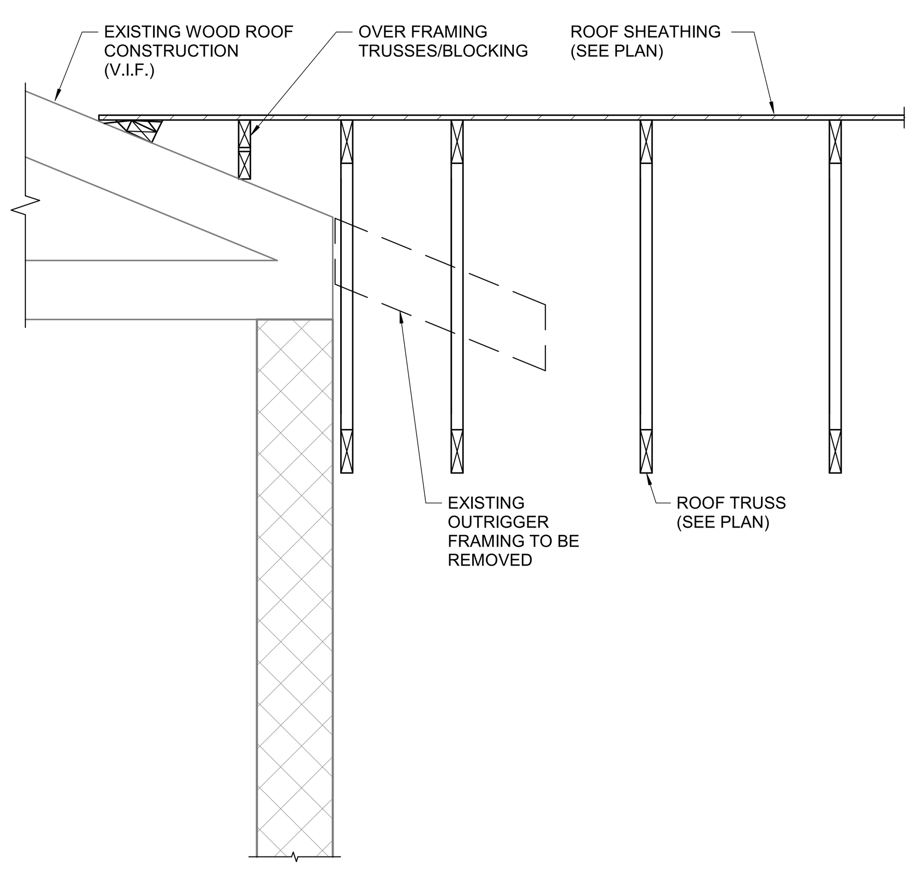

Section 3 / S400

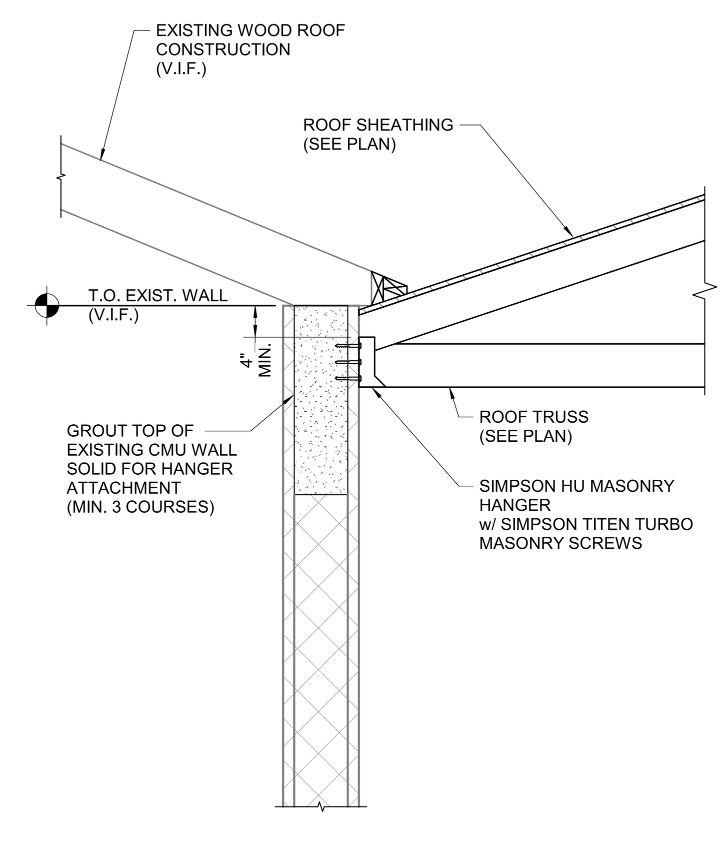

Section 4 / S400

ISSUED FOR PERMIT
5/19/2023

SLATE STRUCTURAL ENGINEERS
40 South Main Street | Nazareth PA 18064 | (610) 365-7634
www.slatestructural.com | Project No. 200.109

MKSD architects

Silvia A. Hoffman, AIA
Todd O. Chambers, AIA
Jill P. Hewes, AIA
Jessica E. Klocek, AIA

MKSD, LLC
1209 Hausman Road, Suite A
Allentown, PA 18104

610.366.2081 phone
mksdarchitects.com web

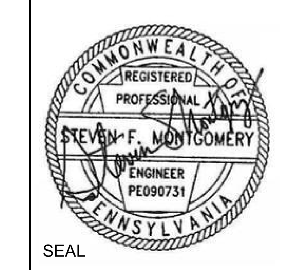

SEAL

HAMPDEN TOWNSHIP AQUATICS CENTER IMPROVEMENTS
5002 HAMPDEN PARK DR.
MECHANICSBURG, PA 17050

REVISIONS
05/19/23 - Issued for Permit

No.	Date	Description

DRAWING TITLE
TYPICAL FRAMING DETAILS & SECTIONS

PROJECT NUMBER
22.226

DRAWN BY
SFM

SCALE
As indicated

DATE
05/19/2023

DRAWING NUMBER
S400

© MKSD, LLC

www.mksdarchitects.com

5/18/2023 9:44:17 AM M:\200.000\200.109\200.109 - SSE - 2023.rvt